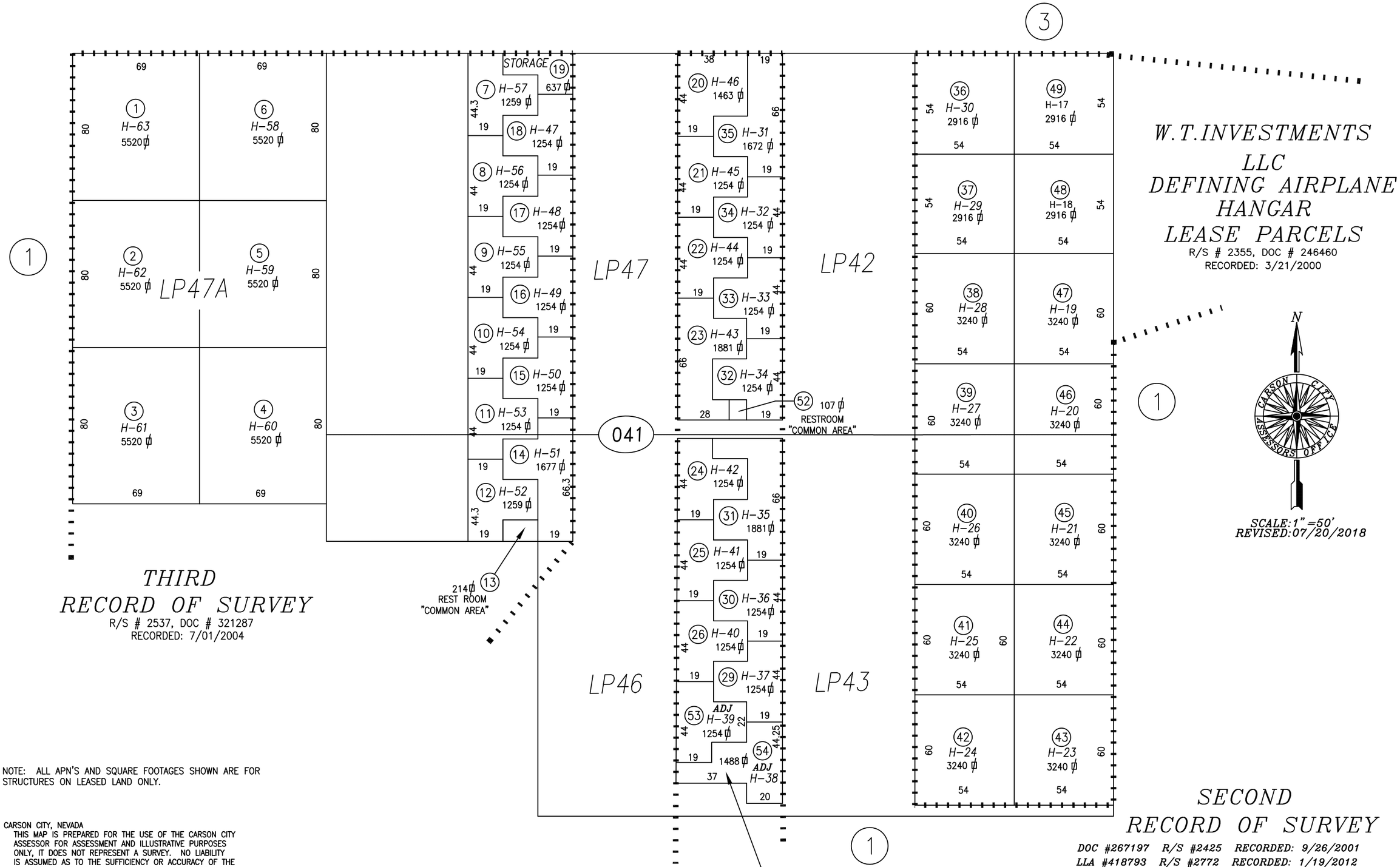

NOTE: ALL APN'S AND SQUARE FOOTAGES SHOWN ARE FOR STRUCTURES ON LEASED LAND ONLY.

UPDATED PAGE

CARSON CITY, NEVADA
THIS MAP IS PREPARED FOR THE USE OF THE CARSON CITY ASSESSOR FOR ASSESSMENT AND ILLUSTRATIVE PURPOSES ONLY, IT DOES NOT REPRESENT A SURVEY. NO LIABILITY IS ASSUMED AS TO THE SUFFICIENCY OR ACCURACY OF THE DATA DELINEATED HEREON. YOU CAN VIEW AND PRINT OUR MAPS AT NO CHARGE FROM OUR WEBSITE AT: http://ccapps.org/publicgis/